IF THIS SHEET IS NOT 24 X 36 IT IS A REDUCED SCALE PRINT - SCALE ACCORDINGLY

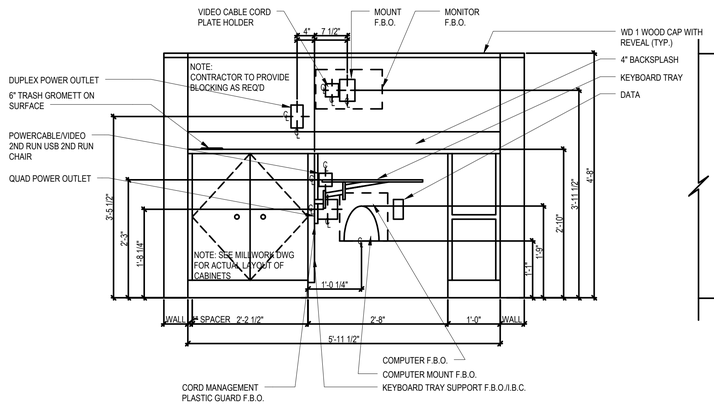

6 MILLWORK S4 - SEE SKA 41D - ADD ALT. #1
3/4" = 1'-0"

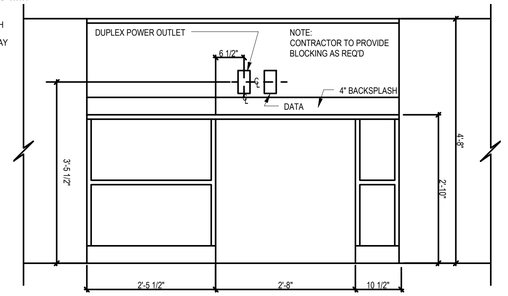

5 MILLWORK S3 - REVERSE OF SKA 41H - ADD ALT. #1
3/4" = 1'-0"

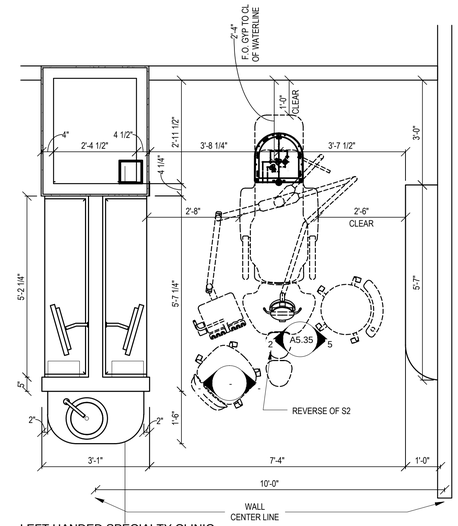

7 LEFT HANDED SPECIALTY CLINIC OPERATORY - ADD ALT. #1
1/2" = 1'-0"

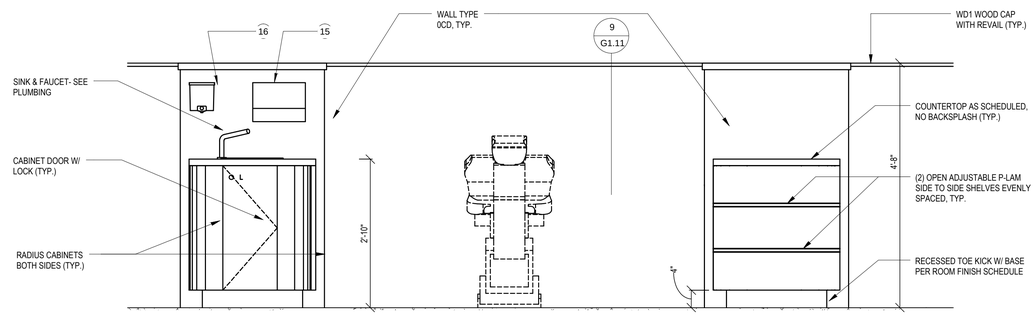

4 TYPICAL OPRATORY-N - ADD ALT. #1
3/4" = 1'-0"

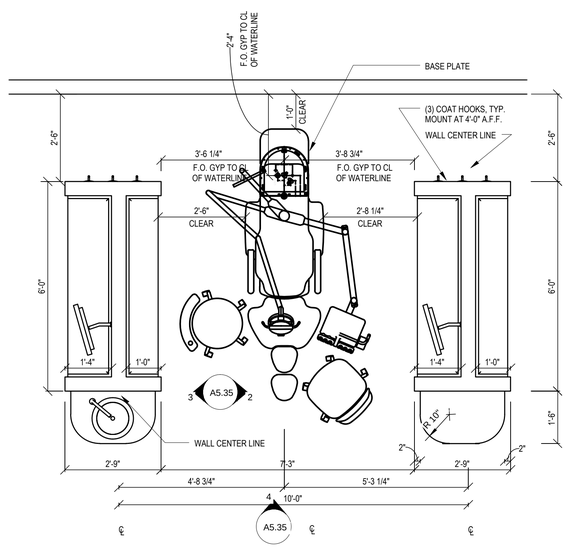

1 TYP. SPECIALTY CLINIC OPERATORY - ADD ALT. #1
1/2" = 1'-0"

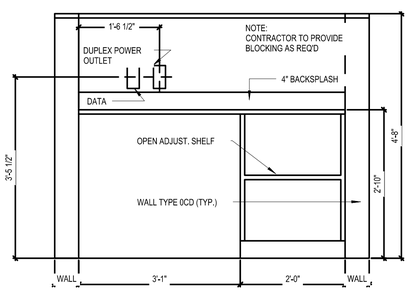

3 MILLWORK S1 & S2 11" COUNTER - ADD ALT. #1
3/4" = 1'-0"

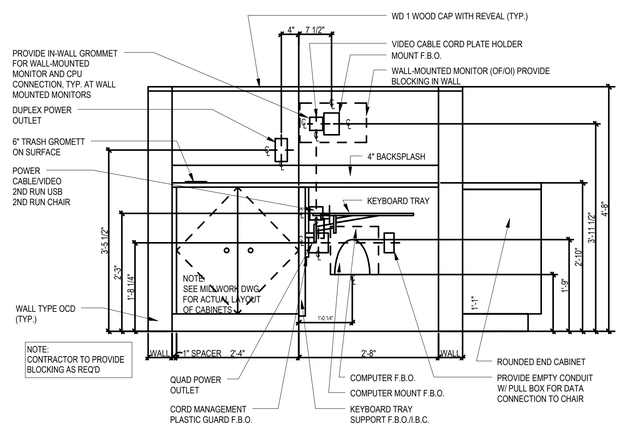

2 MILLWORK S1 & S2 - SEE SKA 41B - ADD ALT. #1
3/4" = 1'-0"

COPYRIGHT: Reuse or reproduction of the contents of this document is not permitted without written permission of PORT CITY ARCHITECTURE PA

PORT ▪ CITY ARCHITECTURE
65 NEWBURY STREET
PORTLAND, ME 04101
207.761.9000
info@portcityarch.com
WWW.PORTCITYARCH.COM

CONSULTANTS

Kahler Slater experience design
BECKER STRUCTURAL ENGINEERS
Vincent A. Dilorio Inc.
E.D.E. INC. ELECTRICAL DESIGN ENGINEERS

Site Design Associates
23 Whitney Way
Topsham, Maine 04086
207-449-4275

REVISIONS

No.	Description	Date
4	Add Alternate #1	2/08/13
3	First Floor Redesign	1/09/13
2	Addendum #9	8/16/12
1	Addendum #8	7/30/12

PERMIT DOCUMENTS

UNIVERSITY OF NEW ENGLAND
PORTLAND, MAINE

PATIENT CARE CENTER
COMP CARE FIT-OUT

DETAILS

Project Number	12533.00
Date	April 26, 2013
Drawn by	JAP/JTC/SB
Checked by	LAS

A5.35

Scale: As indicated